MERCRUISER (350 MAG. BRAVO MPI(GEN+) GM 350 V-8 1996)
Serial Nbr Range: 0F602000 THRU 0K001500 ()

VAPOR SEPARATOR TANK AND FUEL LINES

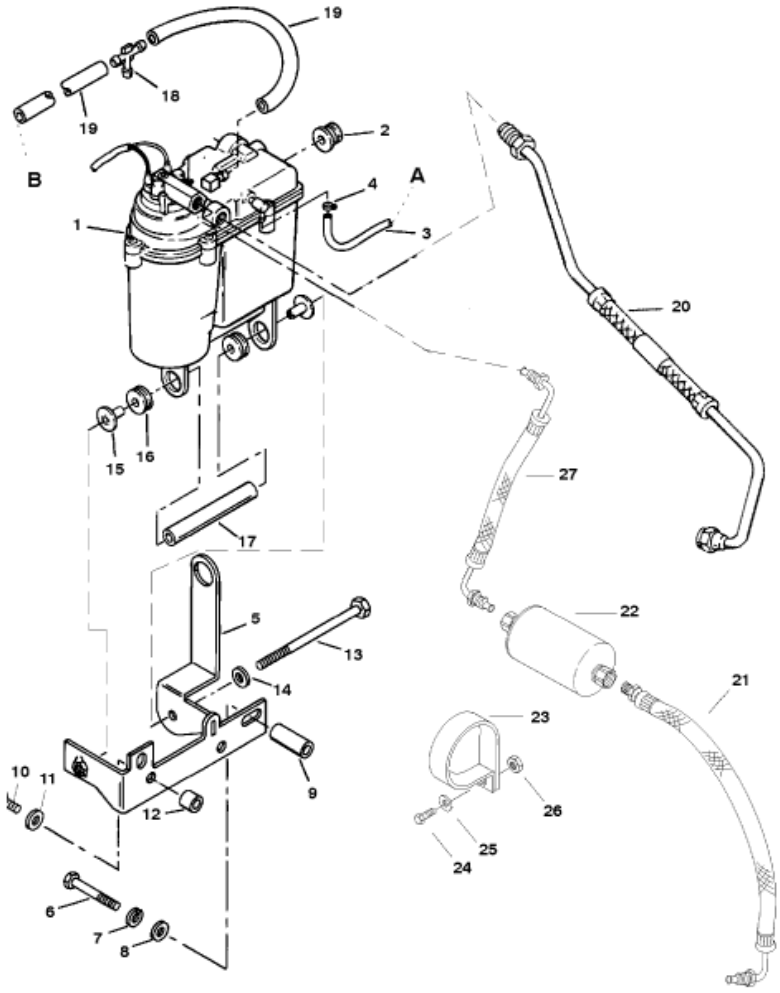

Parts List

Ref	Class	Part	Description	Qty	Comment	Footnote
1		806643A 5	VAPOR SEPARATOR TANK	1		
2	25	88033 1	GROMMET	1		
3	32	805689 32	VENT HOSE	1		
4	54	815504105	CLAMP	2		
5		806645T	BRACKET	1		
6	10	26486	SCREW	1		
7	13	35048	LOCKWASHER	1		
8	12	20553	WASHER	1		
9	23	15895	SPACER (1-7/16 IN.)	1		
10	10	37612	SCREW	1		
11	13	35048	LOCKWASHER	1		
12	23	91034	SPACER (1/2 IN.)	1		
13	10	807056	SCREW	1		
14	12	26825	WASHER	1		
15	23	19064	BUSHING	2		
16	25	88033	GROMMET	2		
17	23	806648	SPACER	1		
18	22	806689	T-FITTING	1		
19	32	73815 67	TUBING	2		
20	32	806813T	FUEL LINE	1	(INLET)	
21	32	806812T	FUEL LINE	1	(OUTLET)	
22	35	807174T	FUEL FILTER	1		
23	54	18904	CLAMP	1		
24	10	807179	SCREW	1		
25	12	29245	WASHER	1		
26	11	814101	NUT	1		
27	32	807173T	FUEL LINE	1		